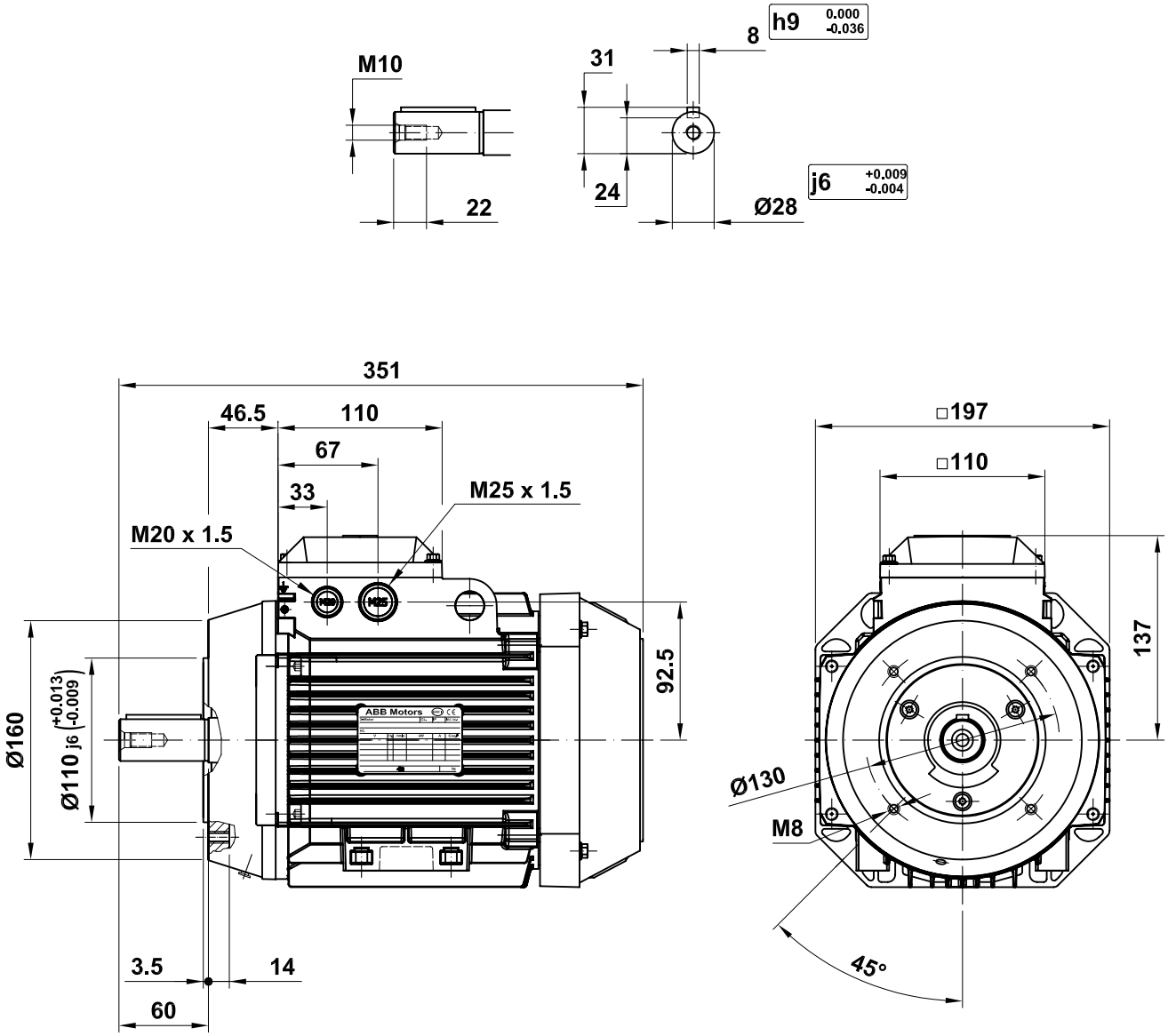

M2(3)AA 100

(*) Except 100 LD

Motor Dimension Print	Motor Type : M2(3)AA 100 L (*)	Document Nº : A1.4731

Description :

Motor flange mounted IM3601 / Motor con brida IM3601

Unit :	Automation Products - Fábrica Motores	Issued by :	EMD/ J.Muñoz	Replaces :	
Date :	2008-02-18	Approved by :	EMD/ G.Blanes	Replaced by :	

Asea Brown Boveri, S.A.

Customer Reference :

ABB