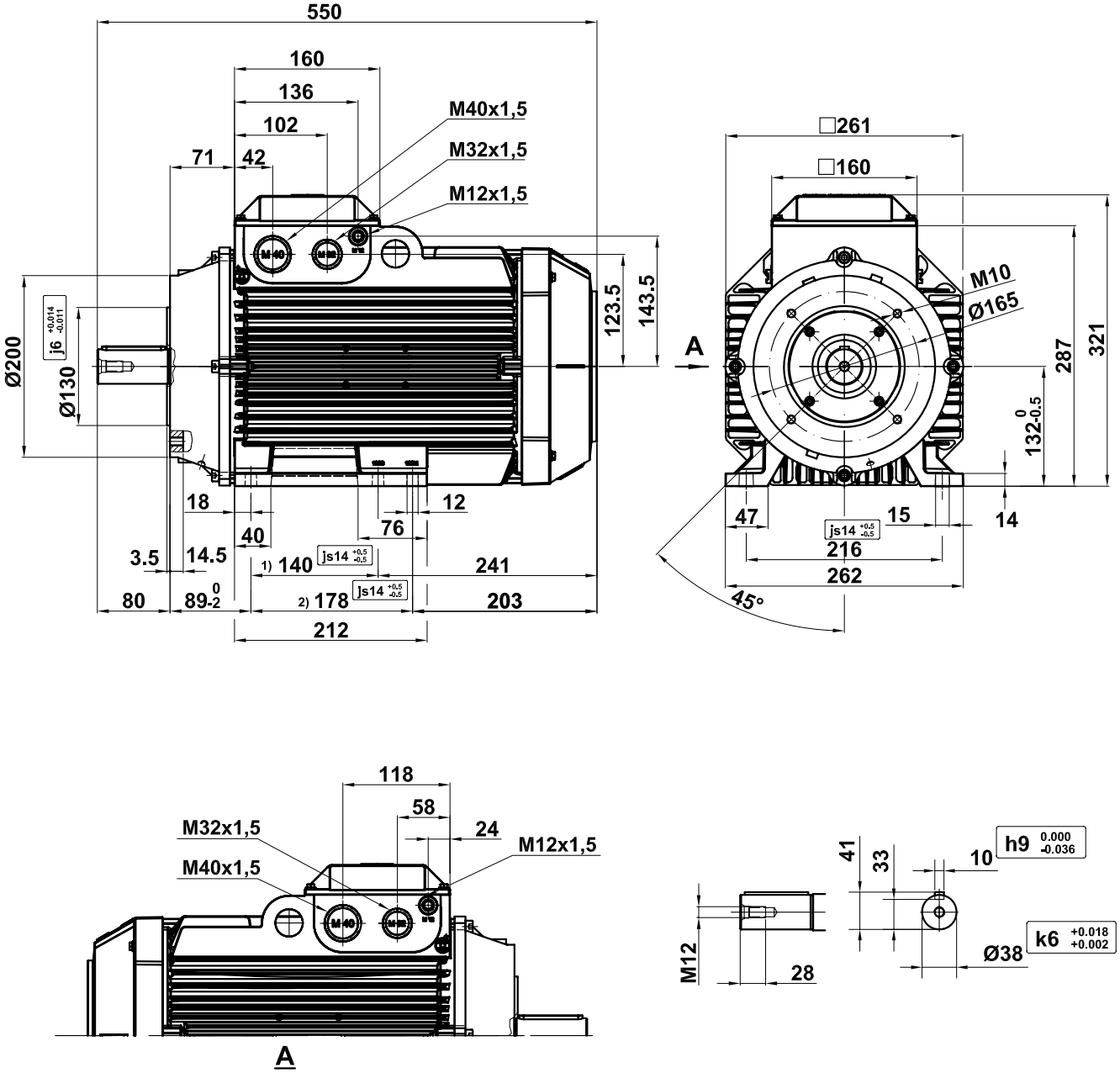

1) SMA-2 ÷ 4
SMC-2 ÷ 4
SMB-2 EFF1
SMC-2 EFF1
SME-2 EFF1
SMB-4 EFF1
SMD-4 EFF1

2) SMD-2

M2(3)AA 132
(Cenelec 2+)

Motor Dimension Print	Motor Type : M2(3)AA 132 (Cenelec 2+)	Document Nº : A1.5004 / 3D A2.5029

Description : Motor foot and flange mounted IM 2101 [B34]
Motor con patas y brida IM 2101 [FT-165(Ø200)]

Unit : Discrete Automation & Motion - Fábrica Motores	Issued by : ERM/ J.L.Bayo	Replaces : To date 2009-03-23	
Date : 2011-03-02	Approved by : ERM/ G.Blanes	Replaced by :	
Asea Brown Boveri, S.A	Customer Reference :	ABB	