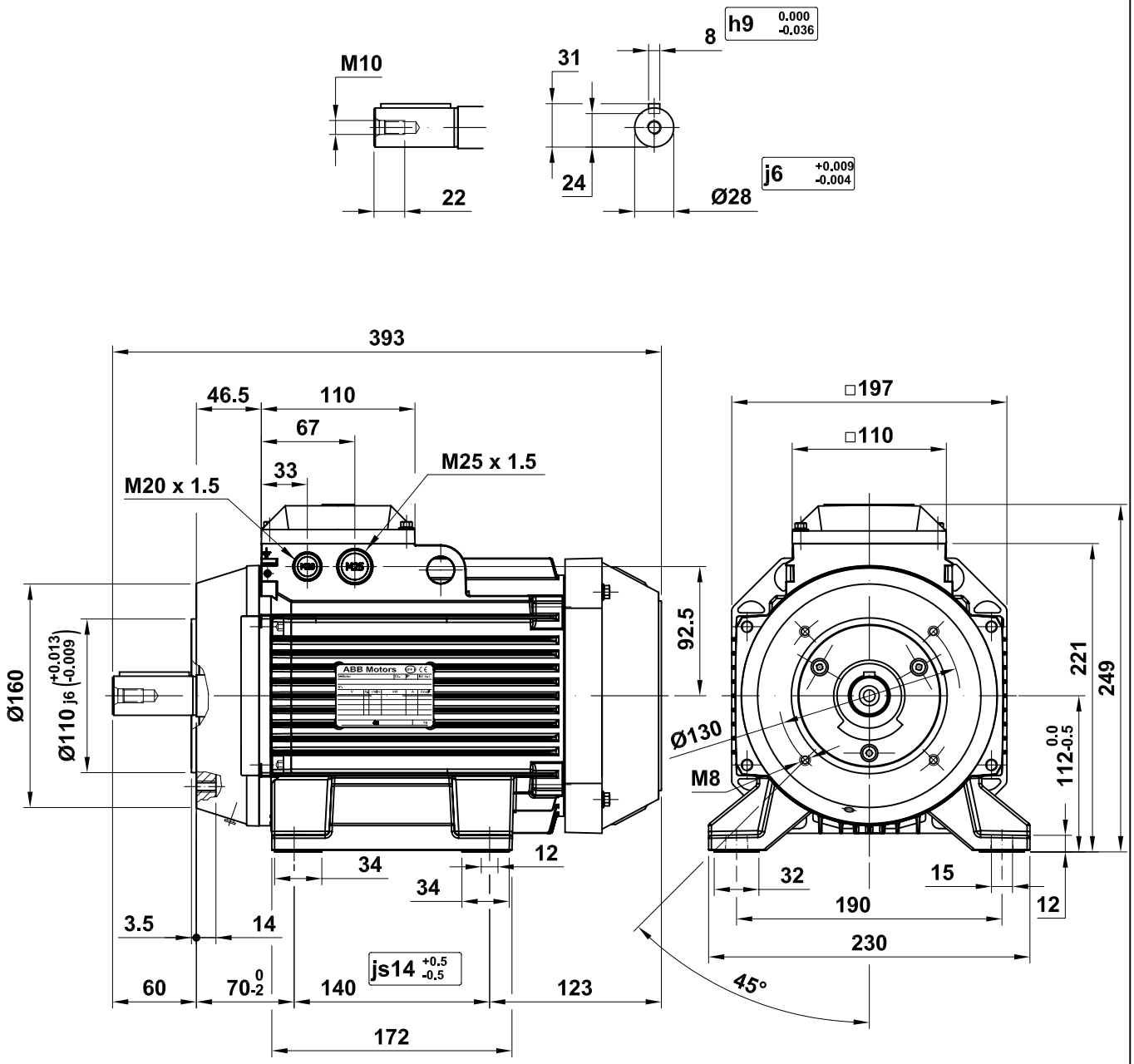

M2(3)AA 112

Motor Dimension Print	Motor Type : M2(3)AA 112	Document N° : A1.4727

Description :

Motor foot and flange mounted IM2101 / Motor con patas y brida IM2101

Unit :	Automation Products - Fábrica Motores	Issued by :	EMD/ J.Muñoz	Replaces :	
Date :	2008-02-18	Approved by :	EMD/ G.Blanes	Replaced by :	

Asea Brown Boveri, S.A.

Customer Reference :

ABB