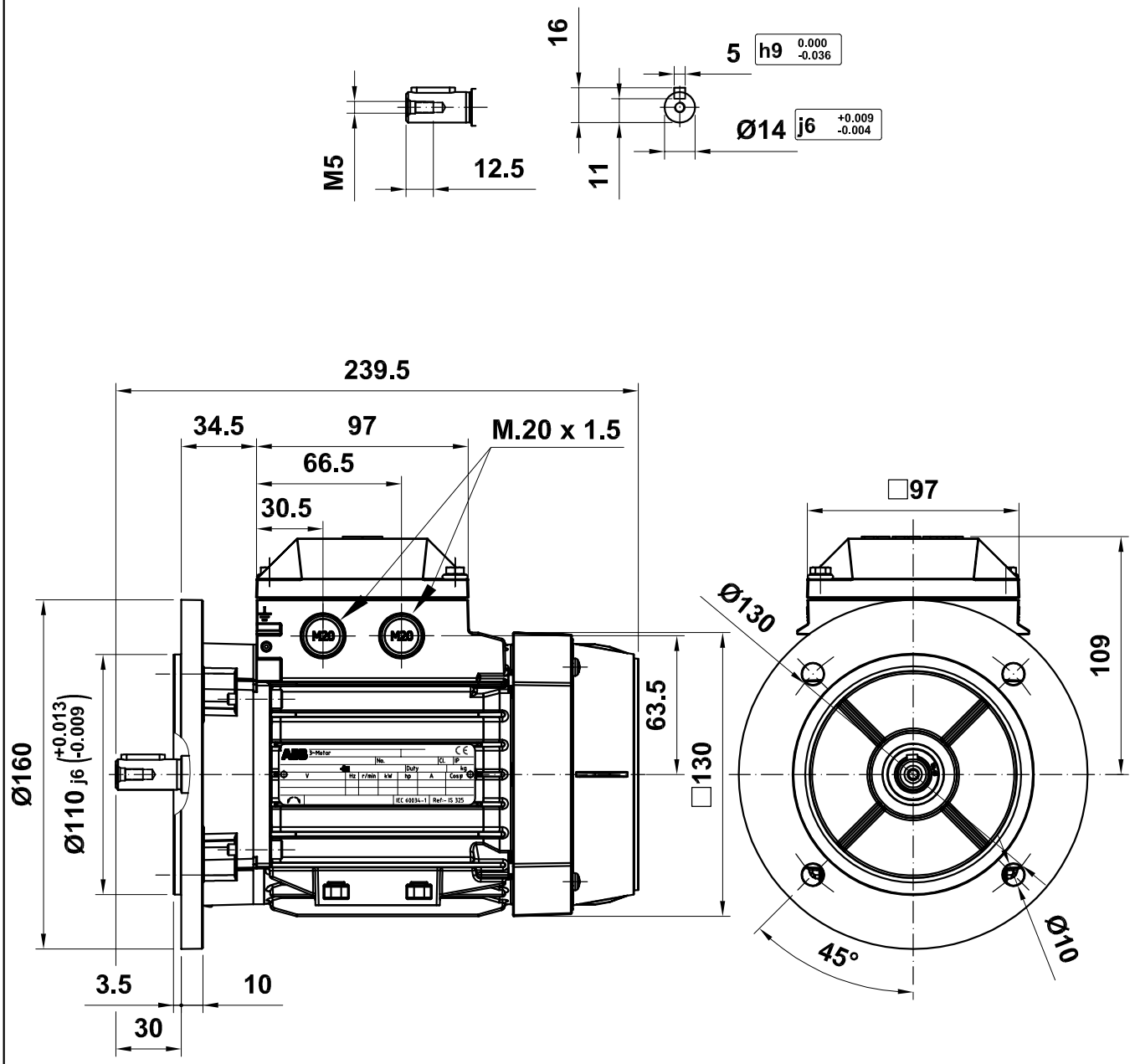

M2(3)AA 071

Motor Dimension Print	Motor Type : M2(3)AA 071	Document Nº : A1.5011

Description :

Motor flange mounted IM3001 / Motor con brida IM3001

Unit :	Automation Products - Fábrica Motores	Issued by :	ERM/J.L. Bayo	Replaces :	2009-04-20
Date :	2010-12-03	Approved by :	ERM/G.Blanes	Replaced by :	J.L. Bayo

Asea Brown Boveri, S.A.

Customer Reference :

ABB