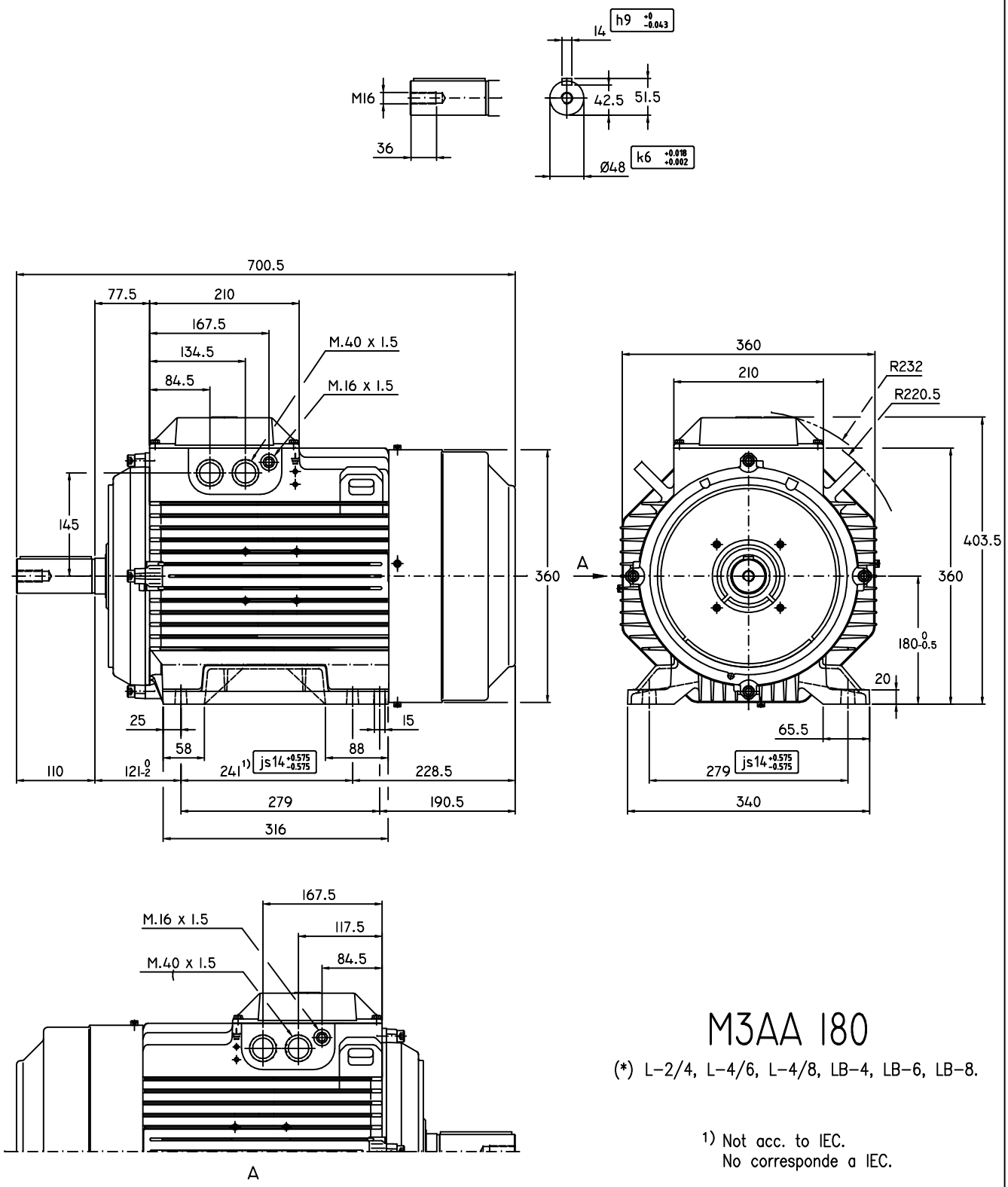

M3AA 180

(*) L-2/4, L-4/6, L-4/8, LB-4, LB-6, LB-8.

1) Not acc. to IEC.
No corresponde a IEC.

Motor Dimension Print	Motor Type : M3AA 180 (*)	Document N° : AE 4431 5138-504
Description : Motor foot mounted IM1001 / Motor con patas IM1001		
Unit : ABB Motores, S.A., Spain. Date : 2001-03-26	Issued by : IKA/ J.MUÑOZ Approved by : IKA/ R.PERERA	Replaces : to date 1998-01-13 Replaced by :
ABB Motors	Customer Reference :	ABB