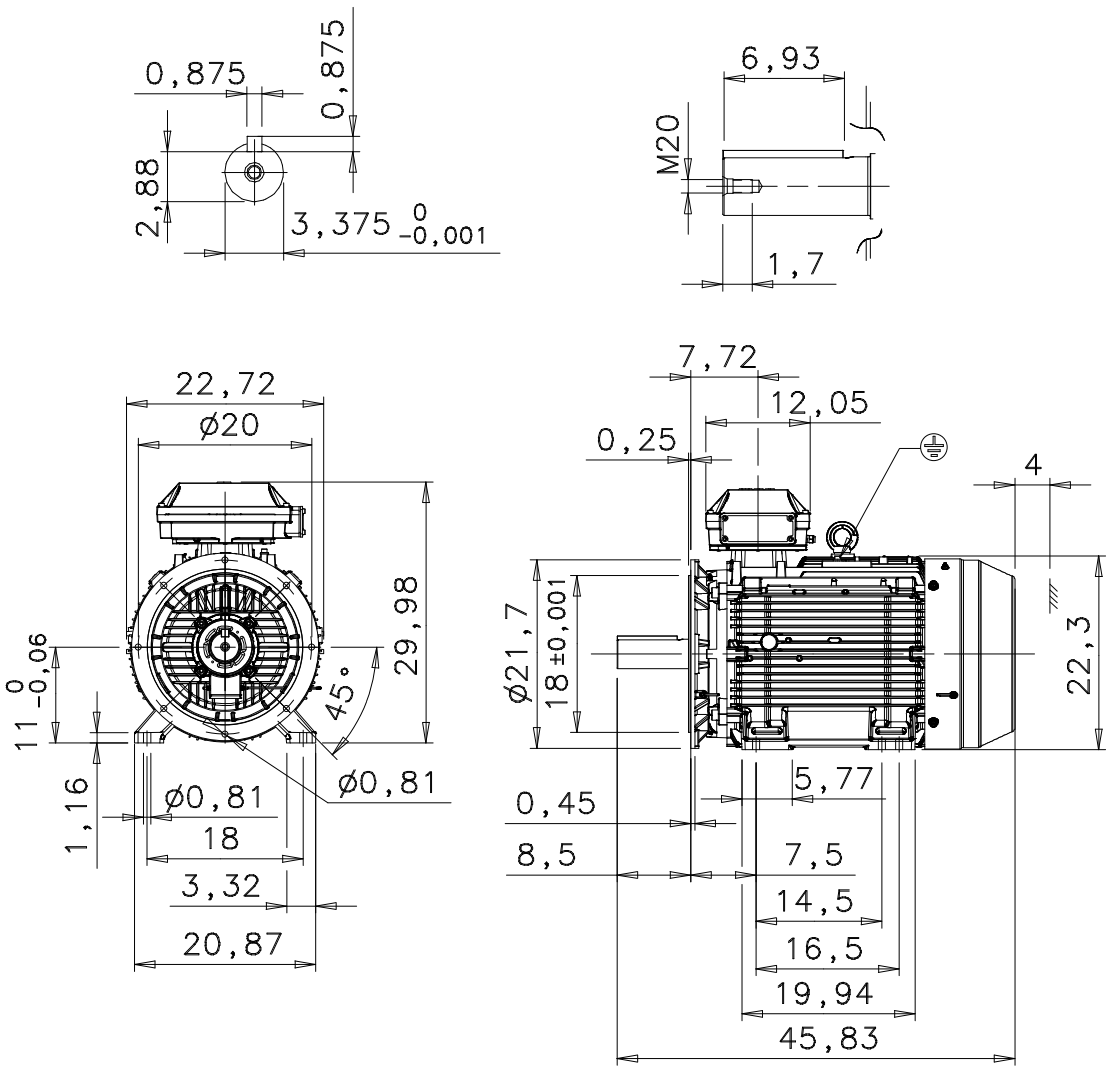

Additional information:

Dimension Print	Motor Type: M3BN 445SM_ 4… B35 V15 V36	Document No: 3GZF500084-6 A 13 BN 445 A
Description: STANDARD SQUIRREL CAGE MOTOR DIMENSIONS IN INCHES, MOTOR SIZES 444 AND 445		
Unit: Motors Date: 28.10.2005	Issued by: B.Lillsjö. Approved by: J.Rantamäki	Replaces: Replaced by:
ABB Oy	Customer Reference:	ABB