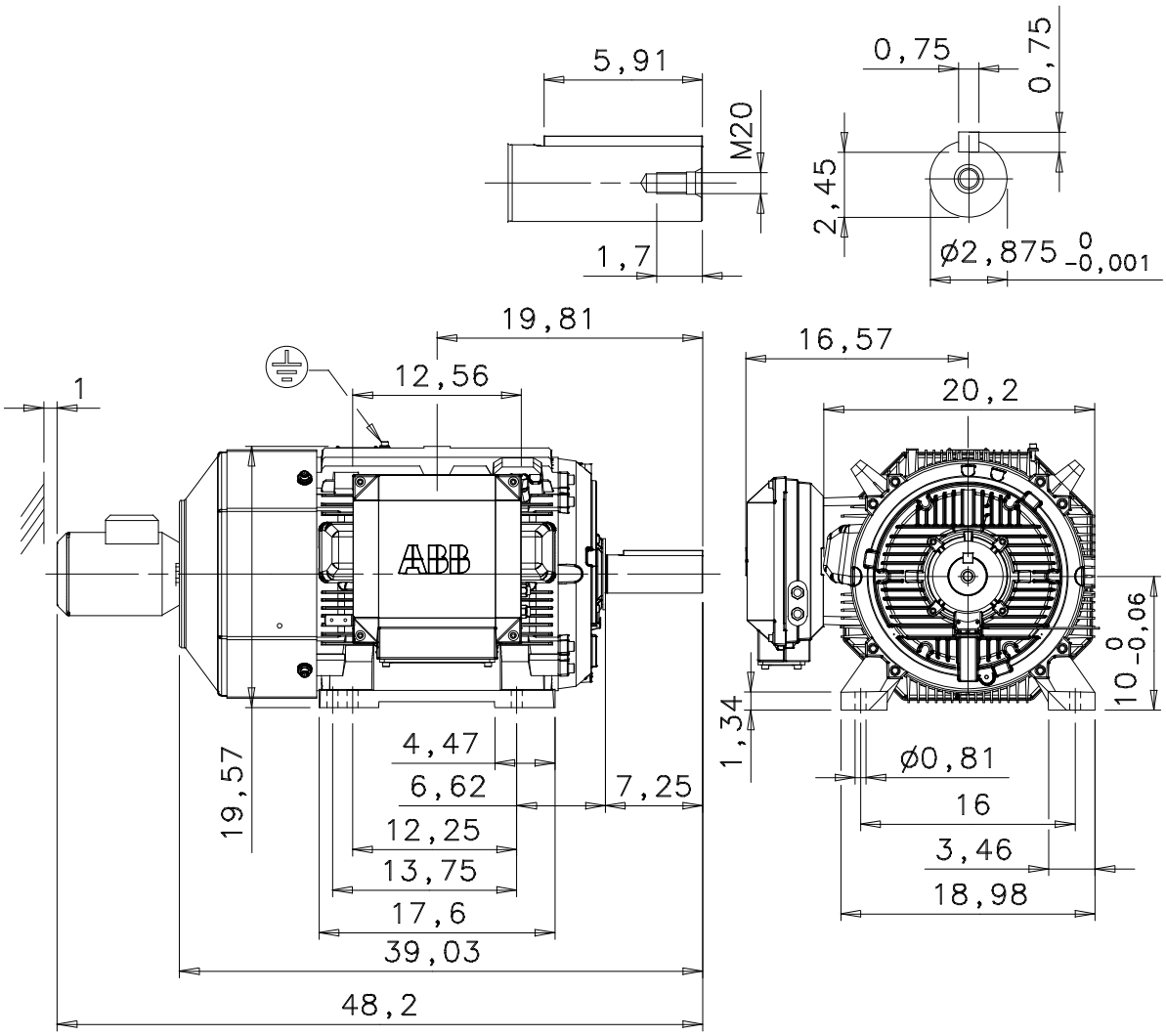

Additional information:

Dimension Print	Motor Type: M3BN 405SM_ 4… B3 V5 V6 B6 B7 B8	Document No: 3GZF500080-18 A 14 BN 405 A
Description: SQUIRREL CAGE MOTOR WITH SEPARATE COOLING, TERMINAL BOX LHS. DIMENSIONS IN INCHES, MOTOR SIZES 404 AND 405		

Unit:	Motors	Issued by:	J.Rissanen	Replaces:
Date:	27.02.2007	Approved by:	C.Vägar	Replaced by:

ABB Oy	Customer Reference:	ABB