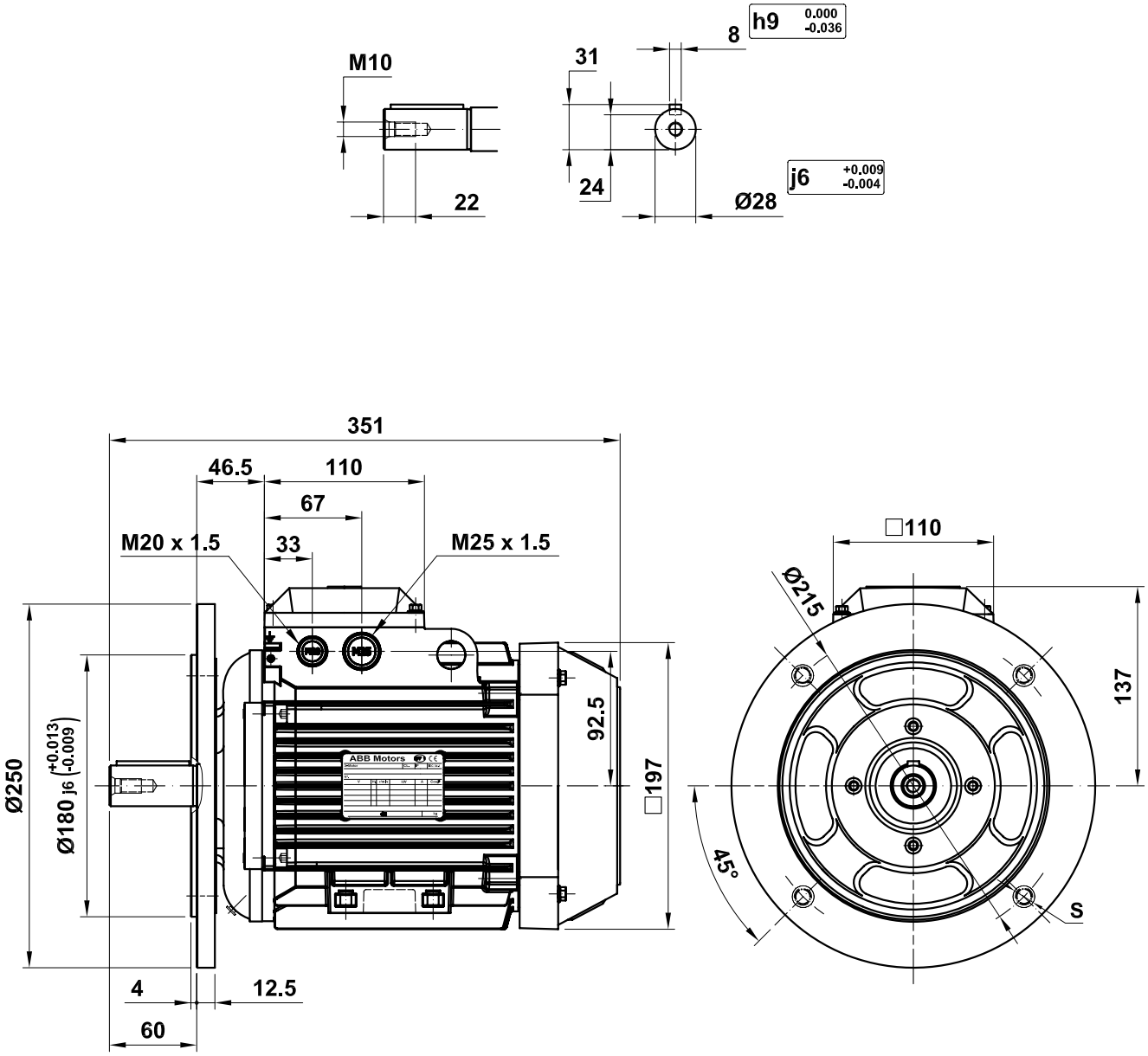

S = { Ø15 – Special IM 3001 / M12 – Special IM 3601 }

M2(3)AA 100

(*) Except 100 LD

Motor Dimension Print	Motor Type : M2(3)AA 100 L IM-B5 FF(T)-215 (*)	Document Nº : A1.4927

Description :

Motor flange mounted special (2-pieces) IM3001 or IM3601

Unit : Discrete Automation & Motion-F. Motores	Issued by : EMD/ G.Gállego	Replaces :
Date : 2010-09-16	Approved by : EMD/ G.Blanes	Replaced by :

Asea Brown Boveri, S.A.

Customer Reference :

ABB