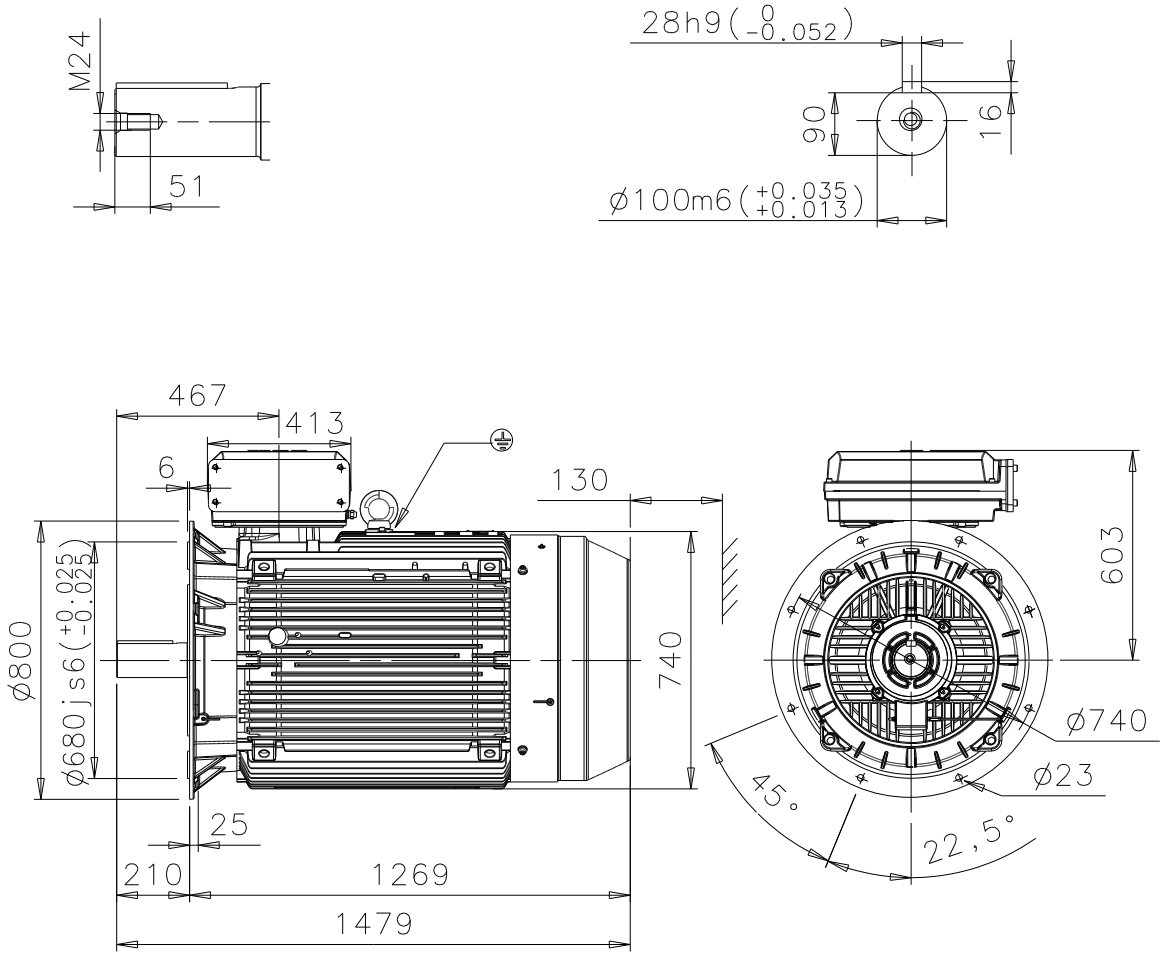

Additional information:

Dimension Print	Motor Type: M3/M4BP 355SM_4-12 B5, V1, V3 M3HP/GP 355SM_4-12 B5, V3	Document No: 3GZF500035-24 C 13 BP 355 A
Description: STANDARD SQUIRREL CAGE MOTOR, TERMINAL BOX 750		

Unit:	Motors	Issued by:	A-R.Mäki	Replaces:
Date:	19.08.2010	Approved by:	J-P.Alanen	Replaced by:

ABB Oy	Customer Reference:	ABB