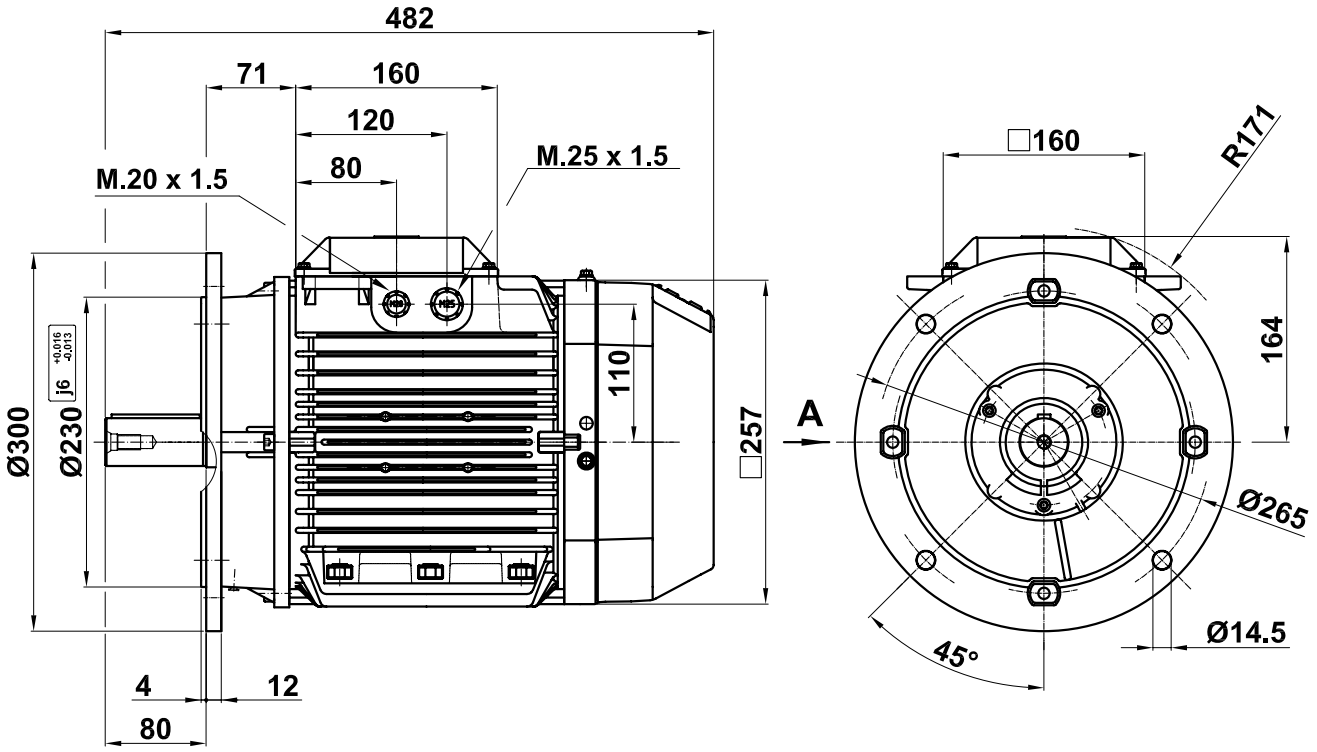

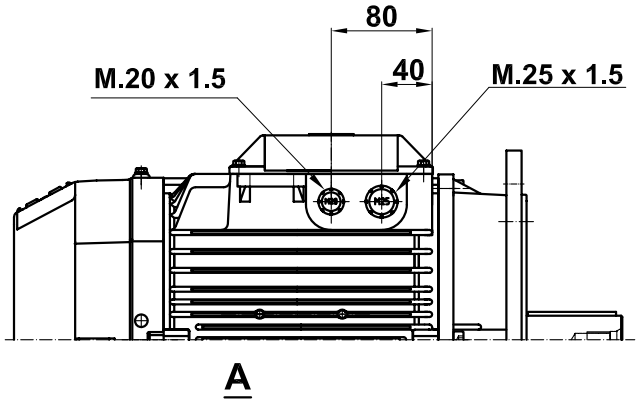

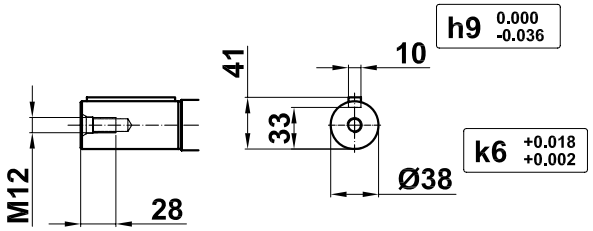

M2(3)AA 132

Motor Dimension Print	Motor Type : **M2(3)AA 132M 2 v. & HO.**	Document Nº : **A1.5053**

Description :
Motor flange mounted IM3001(B5)/ Motor con brida IM3001 [FF-265 (Ø300)]

Unit : **Discrete Automation - Fábrica Motores**	Issued by : **PK/ J.R.Cano**	Replaces : **to date 2009-04-29**
Date : **2010-03-04**	Approved by : **PK/ G.Blanes**	Replaced by :

Asea Brown Boveri, S.A

Customer Reference :

ABB