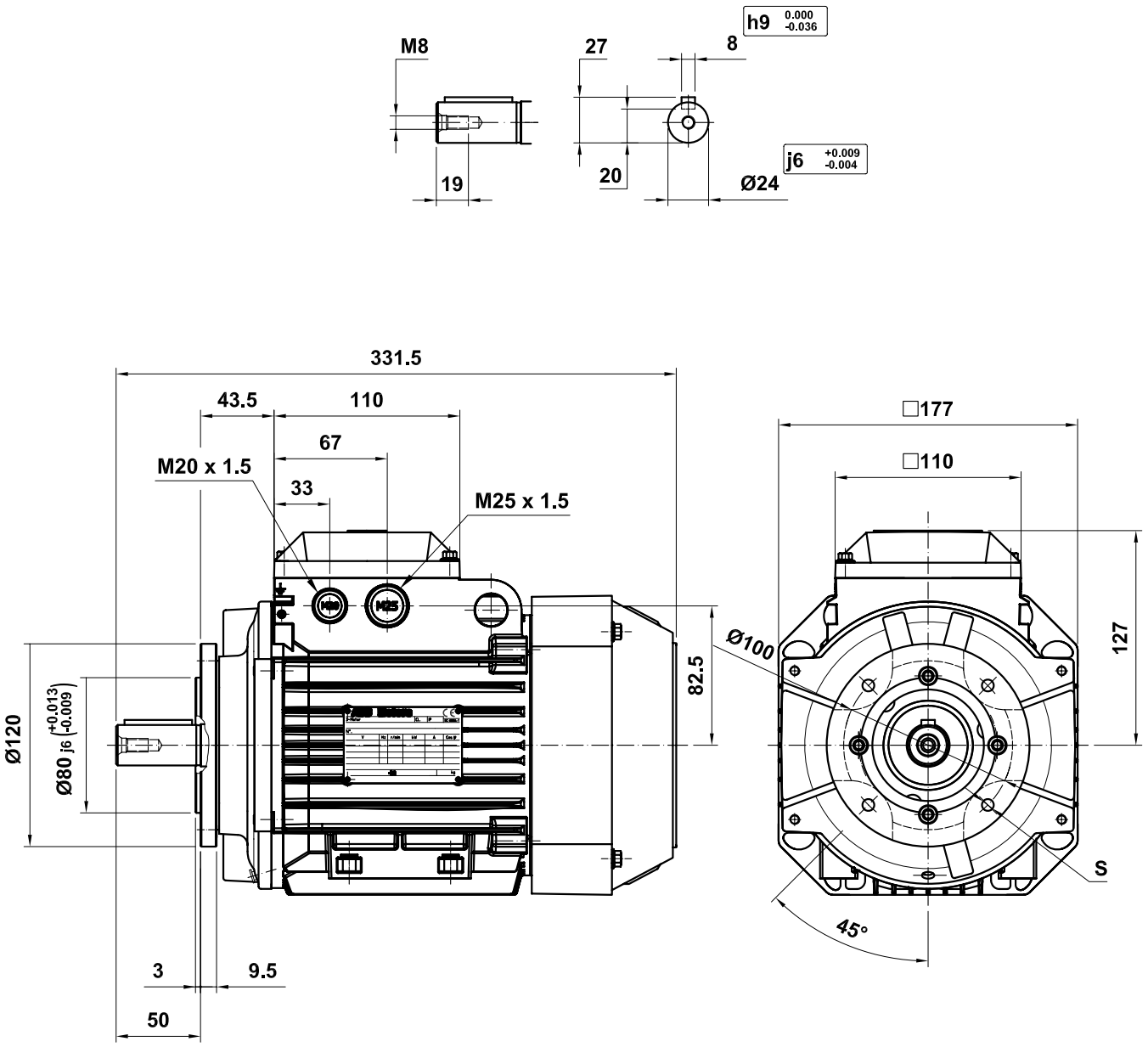

S = { Ø7 – Special IM 3001 / M6 – Special IM 3601 }

M3AA 090 LD

Motor Dimension Print	Motor Type : M3AA 090 LD IMB5(14) FF(T)-100	Document Nº : A1.4913 / 3D A2.5010

Description :

Motor flange mounted special (2-pieces) / Motor brida especial (2 piezas) IM3001 or IM3601

Unit :	Discrete Automation & Motion - Fábrica Motores	Issued by :	EMD/ G.Gállego	Replaces :	To date 2008-03-27
Date :	2011-03-02	Approved by :	EMD/ G.Blanes	Replaced by :	

Asea Brown Boveri, S.A.

Customer Reference :

ABB