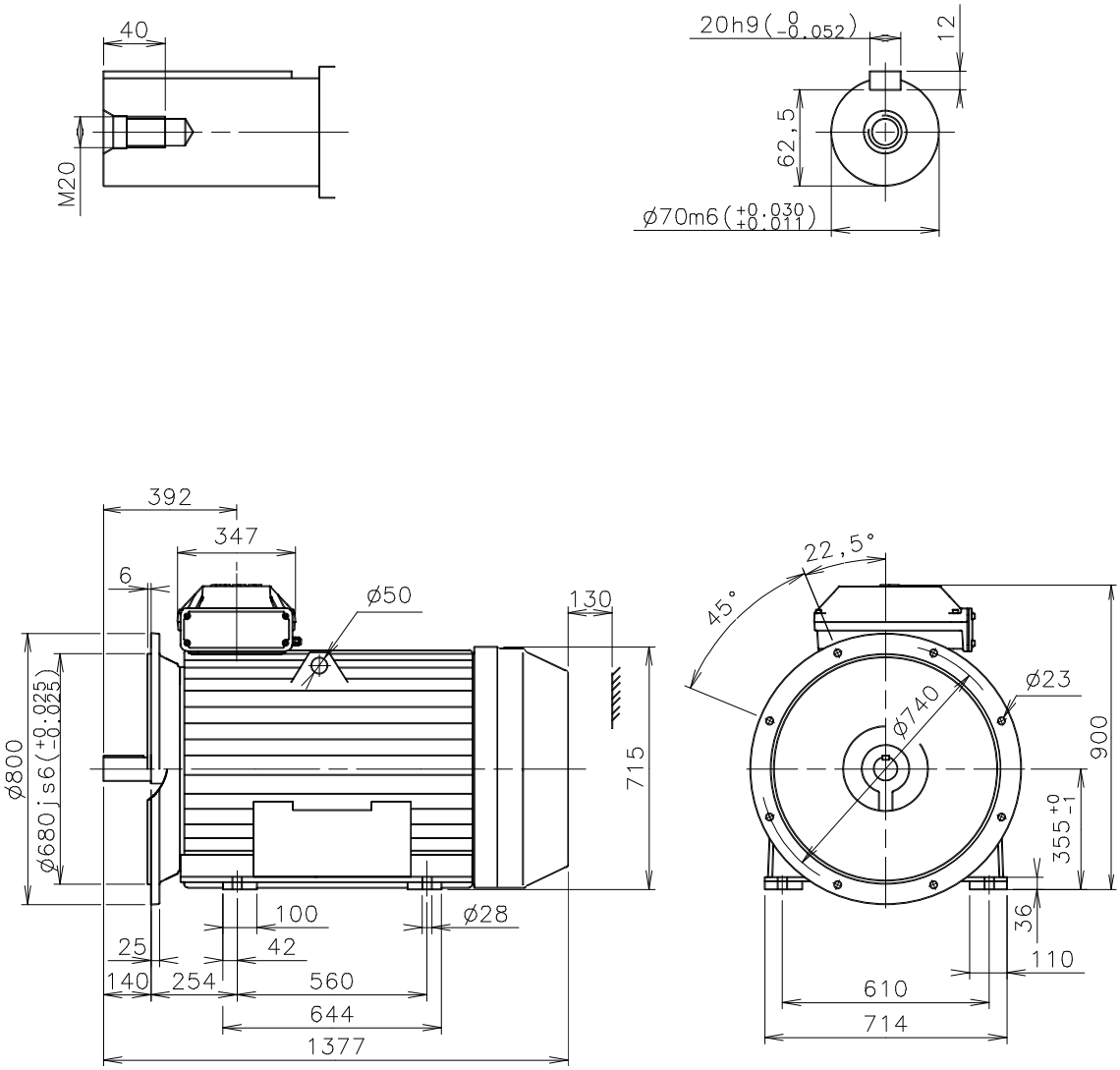

Additional information:

Dimension Print	Motor Type: M2CA 355M_ 2 B35,V15,V36	Document No: 3GZF500435-17 A 13 CA 355 A
Description: STANDARD SQUIRREL CAGE MOTOR		

Unit:	Motors	Issued by:	P.Viitanen	Replaces:
Date:	19.04.2006	Approved by:	J. Hirviniemi	Replaced by:

ABB Oy	Customer Reference:	ABB