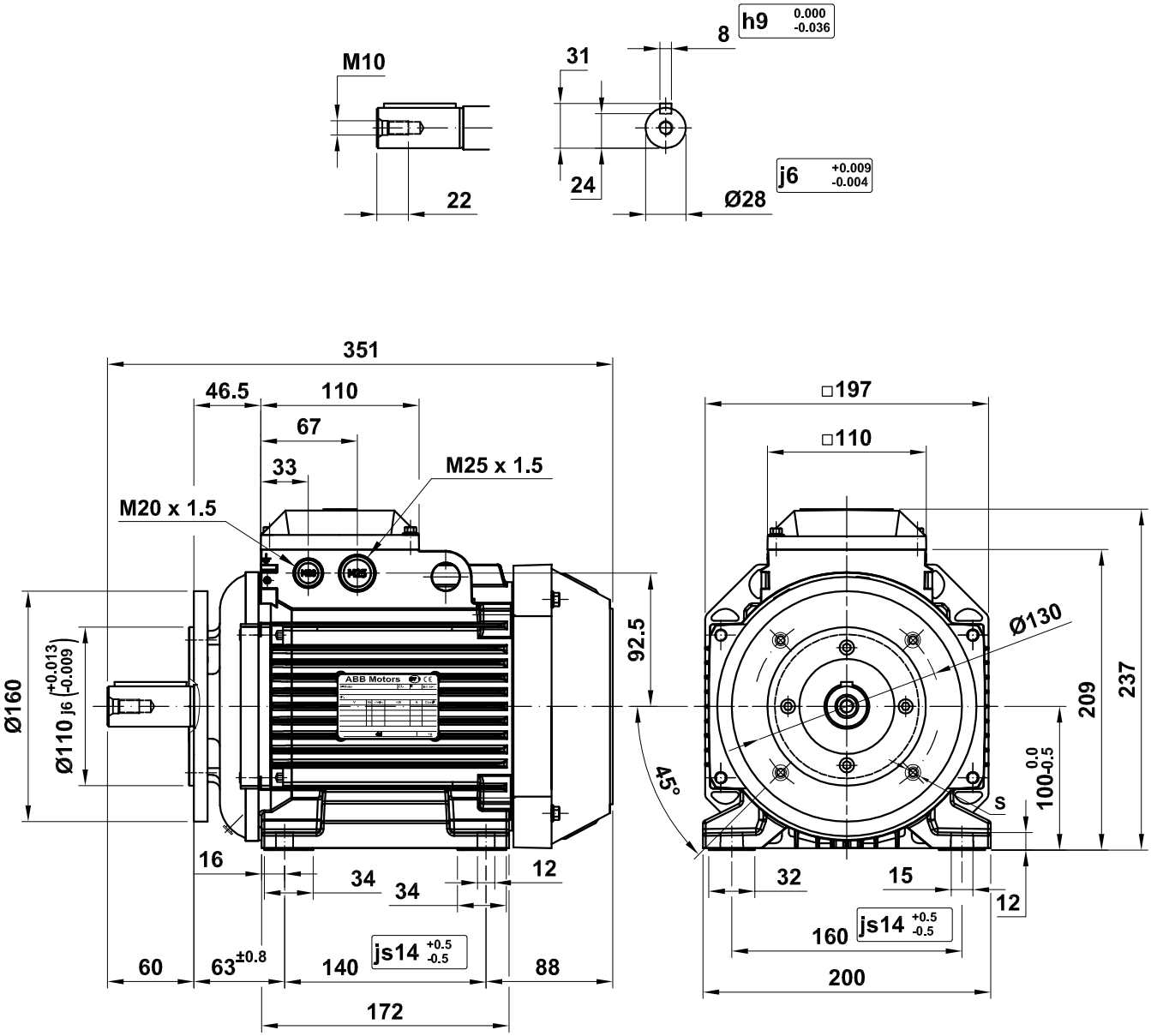

S = { Ø11 – Special IM 2001 / M8 – Special IM 2101 }

M2(3)AA 100

(*) Except 100 LD

Motor Dimension Print	Motor Type : M2(3)AA 100 L IM-B34 FF(T)-130 (*)	Document Nº : A1.4922

Description :

Motor foot and flange mounted special (2-pieces) IM2001 or IM2101

Unit :	Automation Products - Fábrica Motores	Issued by :	EMD/ G.Gállego	Replaces :	
Date :	2008-05-09	Approved by :	EMD/ G.Blanes	Replaced by :	

Asea Brown Boveri, S.A.

Customer Reference :

ABB