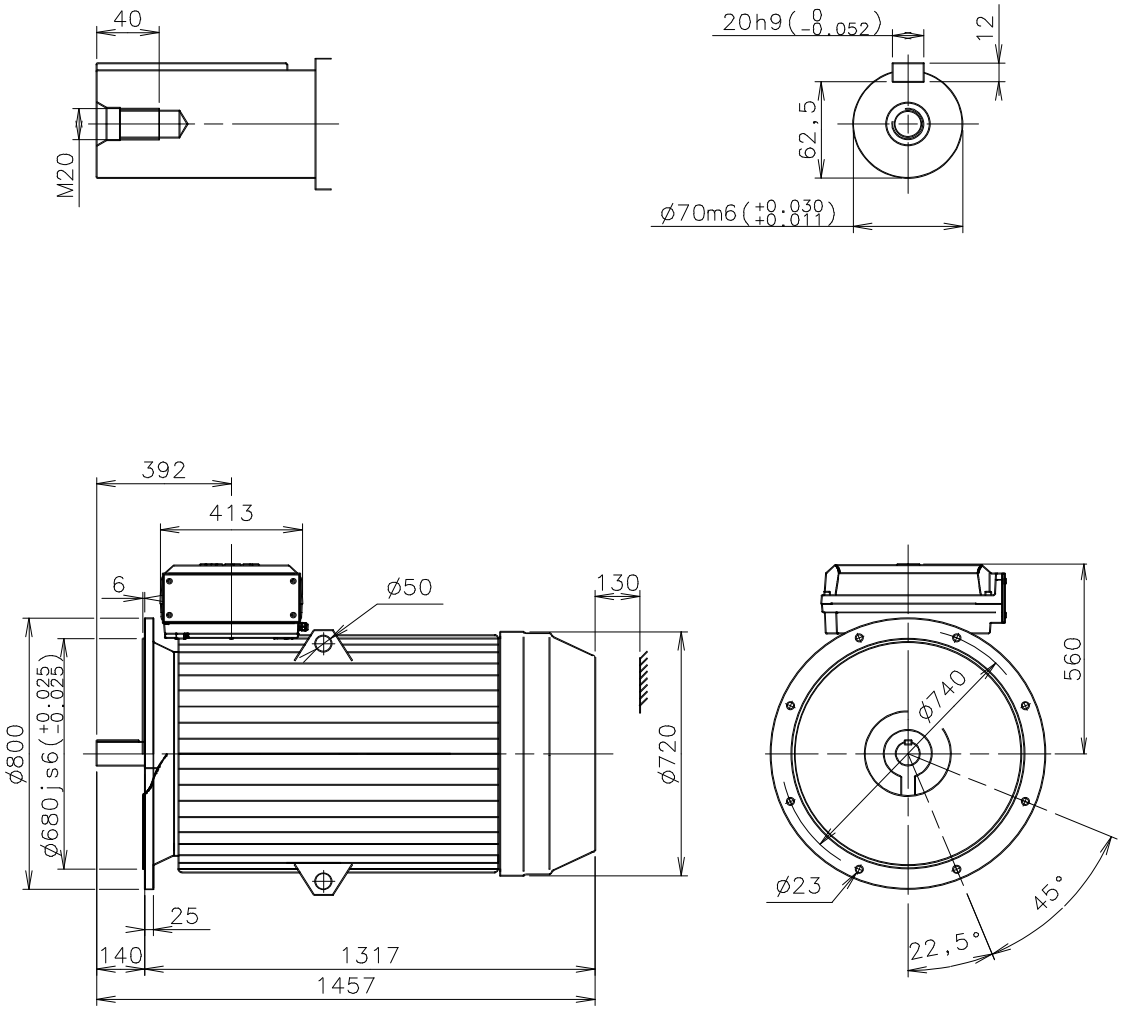

Additional information:

Dimension Print	Motor Type: M2CA 355L_ 2 B5,V1,V3	Document No: 3GZF500435-36 A 13 CA 355 A
Description: STANDARD SQUIRREL CAGE MOTOR, TERMINAL BOX 750		

Unit:	Motors	Issued by:	J-M Koivisto	Replaces:
Date:	14.07.2006	Approved by:	J. Hirviniemi	Replaced by:

ABB Oy	Customer Reference:	ABB