DRAWING NUMBER
D 2202 9000-035

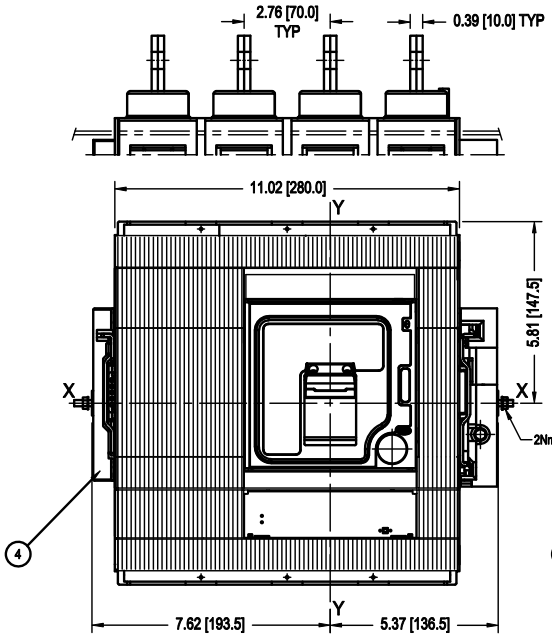

4 POLE FRONT VIEW

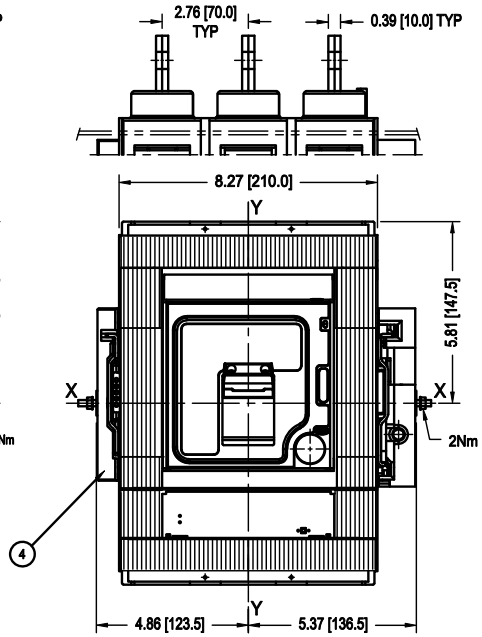

3 POLE FRONT VIEW

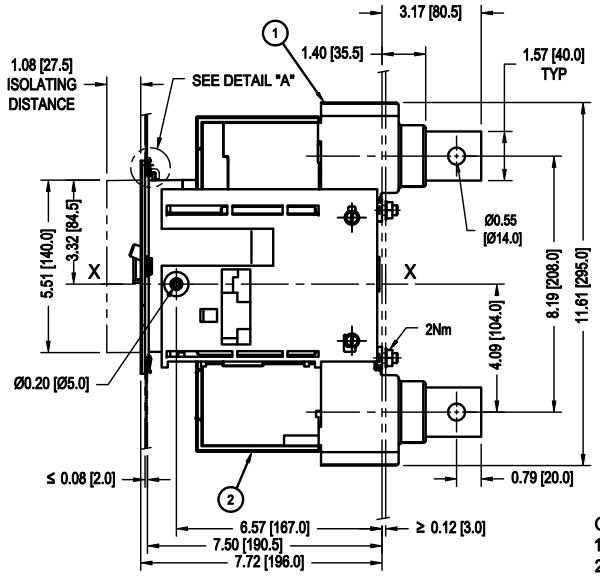

3 & 4 POLE SIDE VIEW

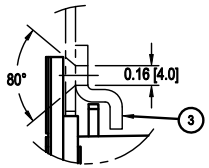

DETAIL "A"

CAPTION
1 - FIXED PART
2 - MOVING PART
3 - LOCK FOR COMPARTMENT DOOR
4 - OVERALL DIMENSIONS WITH CABLED ACCESSORIES MOUNTED (SOR-C, UVR-C)
5 - DOOR HINGE

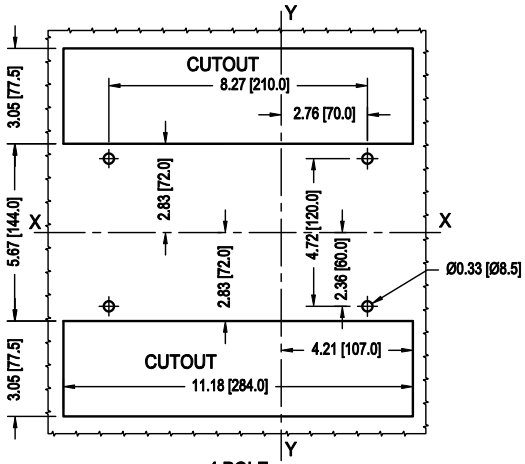

4 POLE

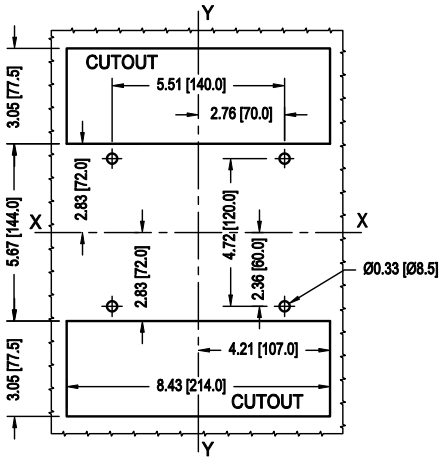

3 POLE

DRILLING TEMPLATE FOR SUPPORT SHEET

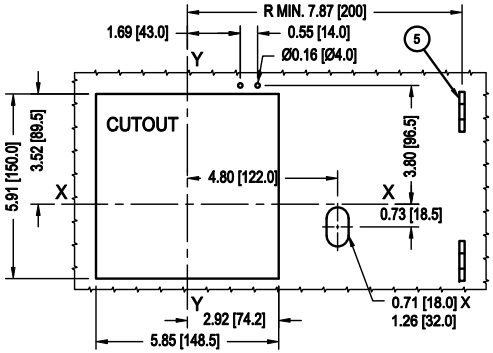

COMPARTMENT DOOR DRILLING TEMPLATE

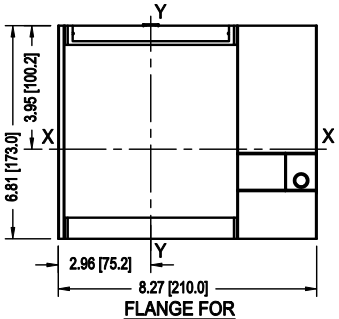

FLANGE FOR COMPARTMENT DOOR

CUST

REV. LET.	REVISIONS	DATE	REV OR APPD BY	REV. LET.	REVISIONS	DATE	REV OR APPD BY

THIS DRAWING IS THE PROPERTY OF ABB Inc. AND CONTAINS PROPRIETARY AND CONFIDENTIAL INFORMATION WHICH MUST NOT BE DUPLICATED, USED OR DISCLOSED OTHER THAN EXPRESSLY AUTHORIZED BY ABB Inc.

ABB Inc.

DATE 10/28/08
DRAWN BY JLS
CHK'D
PROJECT NO.
SHEET 1 OF 1

REV. A
SIZE B

TITLE TMAX T6 WITHDRAWABLE 3 AND 4 POLES W/ VERT REAR TERMINALS

DRAWING NUMBER D 2202 9000-035

DRAWING NUMBER
D 2202 9000-035