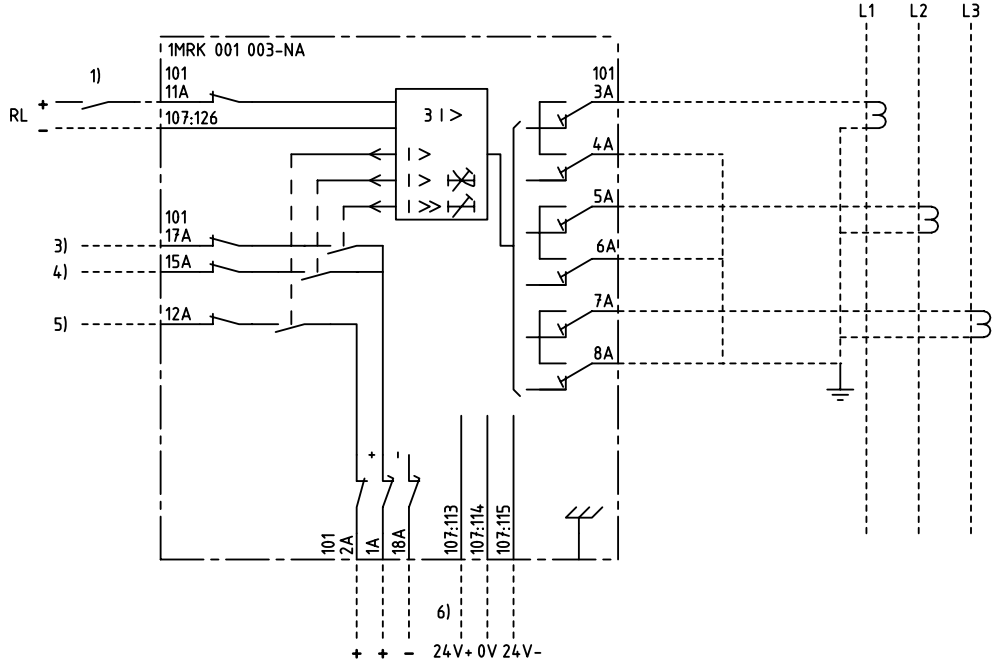

3-PHASE OVERCURRENT PROTECTION
3-FAS ÖVERSTRÖMSSKYDD

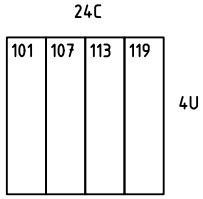

101	RTXP 18
107,113,119	RXIDK 2H

1) ENABLE, BLOCK OR INCREASED OP.VALUE
FRIGIVNING, BLOCKERING ELLER ÖKAT FUNKTIONSVÄRDE

3) HIGH SET STAGE, TRIPPING
HÖGSTRÖMSSTEG, UTLÖSNING

4) LOW SET STAGE, TRIPPING
LÅGSTRÖMSSTEG, UTLÖSNING

5) START OVERCURRENT
START ÖVERSTRÖM

6) MUST BE ENERGISED FROM RXTUG 21/22 H
MÅSTE MATAS FRÅN RXTUG 21/22 H

We reserve all rigths in this document and in the information contained therein. Reproduction, use or disclosure to third parties without express authority is strictly forbidden. © ABB Network Partner AB

ELCAD ID PS/render DATE 2004-06-230:02

Issued in ARCADE

Prepared	97-11-14	H RAZA/JE	
Approved	98-02-05	P JENÅKER	
Rev Ind	Revision	Reg No 7411	
Based on		Pcl 890 474	

TERMINAL DIAGRAM/UTTAGSSCHEMA
RAIDK 3 OVERCURRENT PROTECTION
RAIDK 3 ÖVERSTRÖMSSKYDD

ABB Network Partner AB

Resp dep PS | Rev Ind - | Lang 82

1MRK 001 003-NAA

Sheet 1 | Cont

Issued in ARCADE