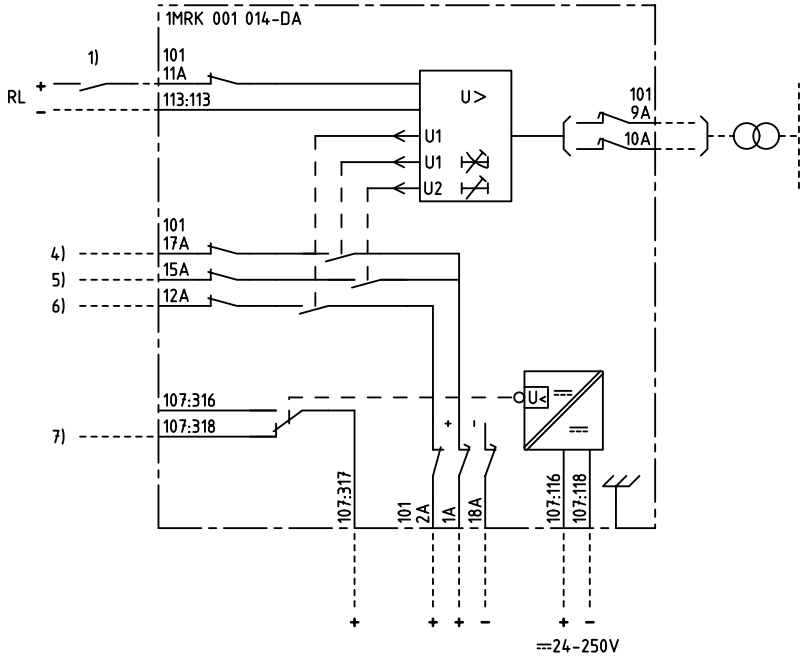

1-PHASE OVER/UNDERVOLTAGE PROTECTION

1-FAS SPÄNNINGSSTEGRINGS- /UNDERSPÄNNINGS-SKYDD

1) RESETTING OF INDICATION
ÅTERSTÄLLNING AV INDIKERING

4) TRIPPING STAGE 1
UTLÖSNING STEG 1

5) TRIPPING STAGE 2
UTLÖSNING STEG 2

6) START STAGE 1
START STEG 1

7) LOSS OF AUXILIARY VOLTAGE
BORTFALL AV HJÄLPSPÄNNING

We reserve all rigths in this document and in the information contained therein. Reproduction, use or disclosure to third parties without express authority is strictly forbidden. © ABB Network Partner AB

ELCAD ID TPTD/render DATE 2004-06-230:52 Issued in ARCADE

Prepared	96-06-17	H RAZA/J ERIKSSON	TERMINAL DIAGRAM/UTTAGSSCHEMA RAEDK 1 VOLTAGE PROTECTION RAEDK 1 SPÄNNINGSSKYDD
Approved	96-07-02	Peter Jenøker	
Rev Ind	Revision	Reg No 7411	
Based on		Pcl 890.461	

ABB Network Partner AB

Resp dep TPTD | Rev Ind - | Lang en | Sheet 1 | Cont

1MRK 001 014-DAA